TOWN OF SCHERERVILLE

PLANNING & BUILDING DEPARTMENT
10 EAST JOLIET STREET • SCHERERVILLE, IN 46375
PHONE: (219) 322-2211 • FAX: (219) 865-5504

REQUIRED INFORMATION FOR DECK PERMITS

- DIMENSIONS
- SHOW LOCATION OF FOOTING PIERS
- BEAMS & SIZE MATERIAL
- JOIST & SIZE MATERIAL
- WHAT THEY ARE USING FOR DECKING
- HEIGHT OFF GROUND
- SHOW LOCATION OF STAIRS
- HANDRAIL MATERIAL
- HOW BEAMS ARE BEING SECURED TO POSTS
- PLAN VIEW OF DECK LOOKING DOWN AT LAYOUT

DECK GUIDE

R507.2 Materials. Materials used for the construction of decks shall comply with this section.

R507.2.1 Wood materials. Wood materials shall be No. 2 grade or better lumber, preservative-treated in accordance with Section R317, or approved, naturally durable lumber, and termite protected where required in accordance with Section R318. Where design in accordance with Section R301 is provided, wood structural members shall be designed using the wet service factor defined in AWC NDS. All preservative-treated wood products in contact with the ground shall be labeled for such usage.

R507.2.1.1 Engineered wood products. Engineered wood products shall be in accordance with Section R502 of the current Indiana Residential Code.

R507.2.2 Plastic composite deck boards, stair treads, guards, or handrails. Plastic composite exterior deck boards, stair treads, guards and handrails shall comply with the requirements of ASTM D7032 and this section.

R507.2.2.1 Labeling. Plastic composite deck boards and stair treads, or their packaging, shall bear a label that indicates compliance with ASTM D7032 and includes the allowable load and maximum allowable span determined in accordance with ASTM D7032. Plastic or composite handrails and guards, or their packaging, shall bear a label that indicates compliance with ASTM D7032 and includes the maximum allowable span determined in accordance with ASTM D7032.

R507.2.2.2 Flame spread index. Plastic composite deck boards, stair treads, guards, and handrails shall exhibit a flame spread index not exceeding 200 when tested in accordance with ASTM E84 or UL 723 with the test specimen remaining in place during the test.

Exception: Plastic composites determined to be noncombustible.

R507.2.2.3 Decay resistance. Plastic composite deck boards, stair treads, guards and handrails containing wood, cellulosic or other biodegradable materials shall be decay resistant in accordance with ASTM D7032.

R507.2.2.4 Termite resistance. Where required by Section 318, plastic composite deck boards, stair treads, guards and handrails containing wood, cellulosic or other biodegradable materials shall be termite resistant in accordance with ASTM D7032.

R507.2.2.5 Installation of plastic composites. Plastic composite deck boards, stair treads, guards and handrails shall be installed in accordance with this code and the manufacturer's instructions.

R507.2.3 Fasteners and connectors, Metal fasteners and connectors used for all decks shall be in accordance with Section R317.3 and Table R5072.3.

R507.2.4 Flashing. Flashing shall be corrosion resistant metal of nominal thickness not less than 0.019 inch (0.48 mm) or approved nonmetallic material that is compatible with the substrate of the structure and the decking materials.

R507.3 Footings. Decks shall be supported on concrete footings or other approved structural systems designed to accommodate all loads in accordance with Section R301. Deck footings shall be sized to carry the imposed loads from the deck structure to the ground as shown in Figure R507.3. The footing depth shall be in accordance with Section R403.1.4.

R507.3.1 Minimum size. The minimum size of concrete footings shall be in accordance with Table R507.3.1, based on the tributary area and allowable soil-bearing pressure in accordance with Table R401.4.1.

R507.3.2 Minimum depth. Deck footings shall extend a minimum of 42" below grade.

TABLE R507.2.3
FASTENER AND CONNECTOR SPECIFICATIONS FOR DECKS[a, b]

ITEM	MATERIAL	MINIMUM FINISH/COATING	ALTERNATE FINISH/COATING[e]
Nails and timber rivets	In accordance with ASTM F1667	Hot-dipped galvanized per ASTM A153	Stainless steel, silicon bronze or copper
Bolts[c] Lag screws[d] (including nuts and washers)	In accordance with ASTM A307 (bolts), ASTM A563 (nuts), ASTM F844 (washers)	Hot-dipped galvanized per ASTM A153, Class C (Class D for $^3/_8$-inch diameter and less) or mechanically galvanized per ASTM B695, Class 55 or 410 stainless steel	Stainless steel, silicon bronze or copper
Metal connectors	Per manufacturer's specification	ASTM A653 type G185 zinc coated galvanized steel or post hot-dipped galvanized per ASTM A123 providing a minimum average coating weight of 2.0 oz./ft^2 (total both sides)	Stainless steel

For SI: 1 inch = 25.4 mm, 1 foot = 304.8 mm.

a. Equivalent materials, coatings and finishes shall be permitted.

b. Fasteners and connectors exposed to salt water or located within 300 feet of a salt water shoreline shall be stainless steel.

c. Holes for bolts shall be drilled a minimum $^1/_{32}$ inch and a maximum $^1/_{16}$ inch larger than the bolt.

d. Lag screws $^1/_2$ inch and larger shall be predrilled to avoid wood splitting per the National Design Specification (NDS) for Wood Construction.

e. Stainless-steel-driven fasteners shall be in accordance with ASTM F1667.

DECK GUIDE

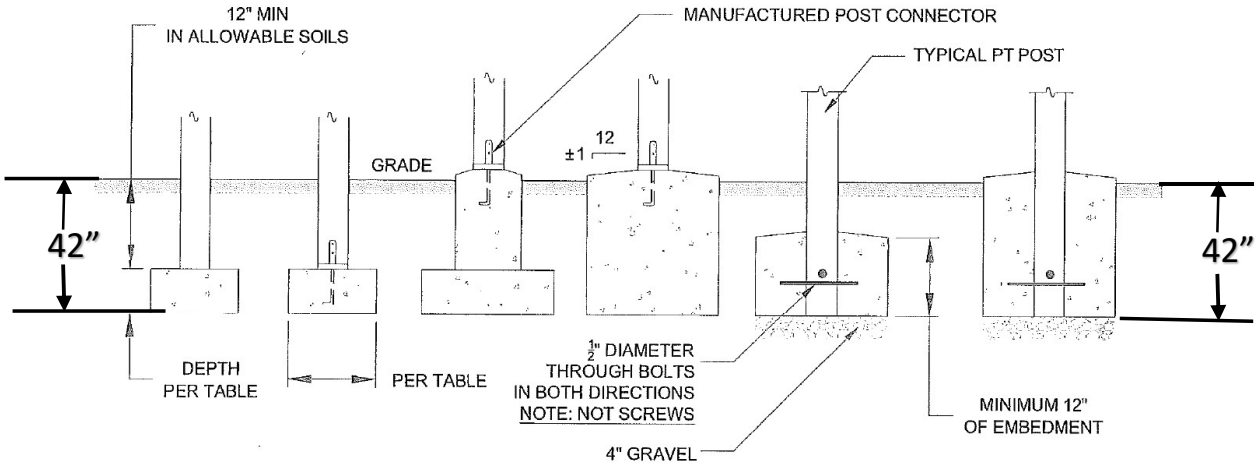

For SI: 1 inch = 25.4 mm.

FIGURE R507.3
DECK POSTS TO DECK FOOTING CONNECTION

FIGURE R507.3.1
MINIMUM FOOTING SIZE FOR DECKS

LIVE OR GROUND SNOW LOAD[b] (psf)	TRIBUTARY AREA (sq. ft.)	1500[c]		
		Side of a square footing (inches)	Diameter of a round footing (inches)	Thickness (inches)
50	20	12	14	8
	40	15	17	
	60	19	21	
	80	21	24	
	100	24	27	9
	120	26	30	10
	140	28	32	11
	160	30	34	12

For SI: 1 inch = 25.4 mm, 1 square foot = 0.0929 m^2, 1 pound per square foot = 0.0479 kPa.
a. Interpolation permitted, extrapolation not permitted.
b. Based on highest load case: Dead + Live or Dead + Snow.
c. Assumes minimum square footing to be 12 inches x 12 inches x 6 inches for 6 x 6 post.
d. If the support is a brick or CMU pier, the footing shall have a minimum 2-inch projection on all si
e. Area, in square feet, of deck surface supported by post and footings.

R507.4 Deck posts. For single-level wood-framed decks with beams sized in accordance with Table R507.5, deck post size shall be in accordance with Table R507.4.

TABLE R507.4
DECK POST HEIGHT[a]

DECK POST SIZE	MAXIMUM HEIGHT[a, b] (feet-inches)
4 × 4	6-9[c]
4 × 6	8
6 × 6	14
8 × 8	14

For SI: 1 inch = 25.4 mm, 1 foot = 304.8 mm,
1 pound per square foot = 0.0479 kPa.
a. Measured to the underside of the beam.
b. Based on 40 psf live load.
c. The maximum permitted height is 8 feet for one-ply and two-ply beams. The maximum permitted height for three-ply beams on post cap is 6 feet 9 inches.

R507.4.1 Deck post to deck footing connection. Where posts bear on concrete footings in accordance with Section R403 and Figure R507.3, lateral restraint shall be provided by manufactured connectors or a minimum post embedment of 12 inches (305 mm) in surrounding soils or concrete piers. Other footing systems shall be permitted.

Exception: Where expansive, compressible, shifting or other questionable soils are present, surrounding soils shall not be relied on for lateral support.

DECK GUIDE

R507.5 Deck Beams. Maximum allowable spans for wood deck beams, as shown in Figure R507.5, shall be in accordance with Table R507.5. Beam plies shall be fastened with two rows of 10d (3-inch X 0.128-inch) nails minimum at 16 inches on center along each edge. Beams shall be permitted to cantilever at each end up to one-fourth of the allowable beam span up to a maximum cantilever of 24 inches. Deck beams of other materials shall be permitted where designed in accordance with accepted engineering practices.

R507.5.1 Deck beam bearing. The ends of beams shall have not less than 1 1/2 inches (38 mm) of bearing on wood or metal and not less than 3 inches (76 mm) of bearing on concrete or masonry for the entire width of the beam. Where multiple-span beams bear on intermediate posts, each ply must have full bearing on the post in accordance with Figures R507.5.1(1) and R507.5.1(2). .

R507.5.2 Deck beam connection to supports. Deck beams shall be attached to supports in a manner capable of transferring vertical loads and resisting horizontal displacement. Deck beam connections to wood posts shall be in accordance with Figures R507.5.1(1) and R507.5.1(2). Manufactured post-to-beam connectors shall be sized for the post and beam sizes. Bolts shall have washers under the head and nut.

R507.6 Deck joists. Maximum allowable spans for wood deck joists, as shown in Figure R507.6, shall be in accordance with Table R507.6. The maximum joist spacing shall be limited by the decking materials in accordance with Table R507.7. The maximum joist cantilever shall be limited to one-fourth of the joist span or the maximum cantilever length specified in Table R507.6, whichever is less.

R507.6.1 Deck joist bearing. The ends of joists shall have not less than 1 1/2 inches of bearing on wood or metal and not less than 3 inches of bearing on concrete or masonry over its entire width. Joists bearing on top of a multiple-ply beam or ledger shall be fastened in accordance with Table R602.3(1). Joists bearing on top of a single-ply beam or ledger shall be attached by a mechanical connector. Joist framing into the side of a beam or ledger board shall be supported by approved joist hangers.

R507.6.2 Deck joist lateral restraint. Joist ends and bearing locations shall be provided with lateral resistance to prevent rotation. Where lateral restraint is provided by joist hangers or blocking between joists, their depth shall equal not less than 60 percent of the joist depth. Where lateral restraint is provided by rim joists, they shall be secured to the end of each joist with not fewer than three 10d (3-inch by 0.128-inch) nails or three No. 10x 3-inch (76 mm) long wood screws.

R507.7 Decking. Maximum allowable spacing for joists' supporting decking shall be in accordance with Table R507.7. Wood decking shall be attached to each supporting member with not less than two 8d threaded nails or two No. 8 wood screws. Other approved decking or fastener systems shall be installed in accordance with the manufacturer's installation requirements.

R507.8 Vertical and lateral supports. Where supported by attachment to an exterior wall, decks shall be positively anchored to the primary structure and designed for both vertical and lateral loads. Such attachment shall not be accomplished by the use of toenails or nails subject to withdrawal. For decks with cantilevered framing members, connection to exterior walls or other framing members shall be designed and constructed to resist uplift resulting from the full live load specified in Table R301.5 acting on the cantilevered portion of the deck. Where positive connection to the primary building structure cannot be verified during inspection, decks shall be self-supporting.

R507.9 Vertical and lateral supports at band joist, Vertical and lateral supports for decks shall comply with this section.

R507.9.1 Vertical supports. Vertical loads shall be transferred to band joists with ledgers in accordance with this section.

R507.9.1.1 Ledger details. Deck ledgers shall be a minimum 2-inch by 8-inch (51 mm by 203 mm) nominal, pressure-preservative-treated Southern pine, incised pressure-preservative-treated hem-fir, or approved, naturally durable, No. 2 grade or better lumber. Deck ledgers shall not support concentrated loads from beams or girders. Deck ledgers shall not be supported on stone or masonry veneer.

R507.9.1.2 Band joist details. Band joists supporting a ledger shall be a minimum 2-inch-nominal (51 mm), solid-sawn, spruce-pine-fir or better lumber or a minimum 1-inch by 9 1/2-inch (25 mm x 241 mm) dimensional, Douglas fir or better, laminated veneer lumber. Band joists shall bear fully on the primary structure capable of supporting all required loads.

R507.9.1.3 Ledger to band joist details. Fasteners used in deck ledger connections in accordance with Table R507.9.1.3(1) shall be hot-dipped galvanized or stainless steel and shall be installed in accordance with Table R507.9.1.3(2) and Figures R507.9.1.3(1) and R5079.1.3(2).

R507.9.1.4 Alternate ledger details. Alternate framing configurations supporting a ledger constructed to meet the load requirements of Section shall be permitted.

DECK GUIDE

R507.9.2 Lateral connection. Lateral loads shall be transferred to the ground or to a structure capable of transmitting them to the ground, Where the lateral load connection is provided in accordance with Figure R507.9.2(1), hold down tension devices shall be installed in not less than two locations per deck, within 24 inches (610 mm) of each end of the deck. Each device shall have an allowable stress design capacity of not less than 1,500 pounds (6672 N). Where the lateral load connections are provided in accordance with Figure R-507.9.2(2), the hold-down tension devices shall be installed in not less than four locations per deck, and each device shall have an allowable stress design capacity of not less than 750 pounds (3336 N)

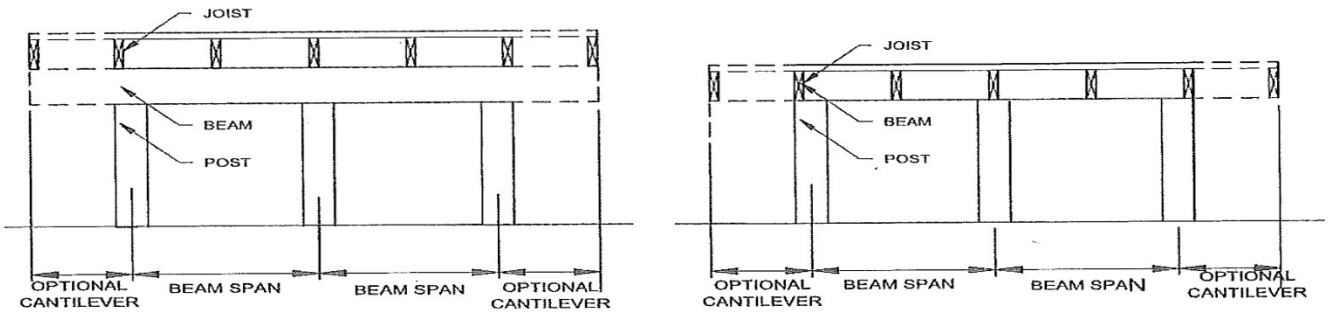

FIGURE R507.5
TYPICAL DECK JOIST SPANS

TABLE R507.5
DECK BEAM SPAN LENGTHS[a, b, g] (feet - inches)

SPECIES[c]	SIZE[d]	DECK JOIST SPAN LESS THAN OR EQUAL TO: (feet)						
		6	8	10	12	14	16	18
Southern pine	1 – 2 × 6	4-11	4-0	3-7	3-3	3-0	2-10	2-8
	1 – 2 × 8	5-11	5-1	4-7	4-2	2-10	3-7	3-5
	1 – 2 × 10	7-0	6-0	5-5	4-11	4-7	4-3	4-0
	1 – 2 × 12	8-3	7-1	6-4	5-10	5-5	5-0	4-9
	2 – 2 × 6	6-11	5-11	5-4	4-10	4-6	4-3	4-0
	2 – 2 × 8	8-9	7-7	6-9	6-2	5-9	5-4	5-0
	2 – 2 × 10	10-4	9-0	8-0	7-4	6-9	6-4	6-0
	2 – 2 × 12	12-2	10-7	9-5	8-7	8-0	7-6	7-0
	3 – 2 × 6	8-2	7-5	6-8	6-1	5-8	5-3	5-0
	3 – 2 × 8	10-10	9-6	8-6	7-9	7-2	6-8	6-4
	3 – 2 × 10	13-0	11-3	10-0	9-2	8-6	7-11	7-6
	3 – 2 × 12	15-3	13-3	11-10	10-9	10-0	9-4	8-10
Douglas fir-larch[e], hem-fir[e], spruce-pine-fir[e], redwood, western cedars, ponderosa pine[f], red pine[f]	3 × 6 or 2 – 2 x 6	5-5	4-8	4-2	3-10	3-6	3-1	2-9
	3 × 8 or 2 – 2 × 8	6-10	5-11	5-4	4-10	4-6	4-1	3-8
	3 × 10 or 2 – 2 × 10	8-4	7-3	6-6	5-11	5-6	5-1	4-8
	3 × 12 or 2 – 2 × 12	9-8	8-5	7-6	6-10	6-4	5-11	5-7
	4 × 6	6-5	5-6	4-11	4-6	4-2	3-11	3-8
	4 × 8	8-5	7-3	6-6	5-11	5-6	5-2	4-10
	4 × 10	9-11	8-7	7-8	7-0	6-6	6-1	5-8
	4 × 12	11-5	9-11	8-10	8-1	7-6	7-0	6-7
	3 – 2 × 6	7-4	6-8	6-0	5-6	5-1	4-9	4-6
	3 – 2 × 8	9-8	8-6	7-7	6-11	6-5	6-0	5-8
	3 – 2 × 10	12-0	10-5	9-4	8-6	7-10	7-4	6-11
	3 – 2 × 12	13-11	12-1	10-9	9-10	9-1	8-6	8-1

For SI: 1 inch = 25.4 mm, 1 foot = 304.8 mm, 1 pound per square foot = 0.0479 kPa, 1 pound = 0.454 kg.
a. Ground snow load, live load = 40 psf, dead load = 10 psf, L/Δ = 360 at main span, L/Δ = 180 at cantilever with a 220-pound point load applied at the end.
b. Beams supporting deck joists from one side only.
c. No. 2 grade, wet service factor.
d. Beam depth shall be greater than or equal to depth of joists with a flush beam condition.
e. Includes incising factor.
f. Northern species. Incising factor not included.
g. Beam cantilevers are limited to the adjacent beam's span divided by 4.

DECK GUIDE

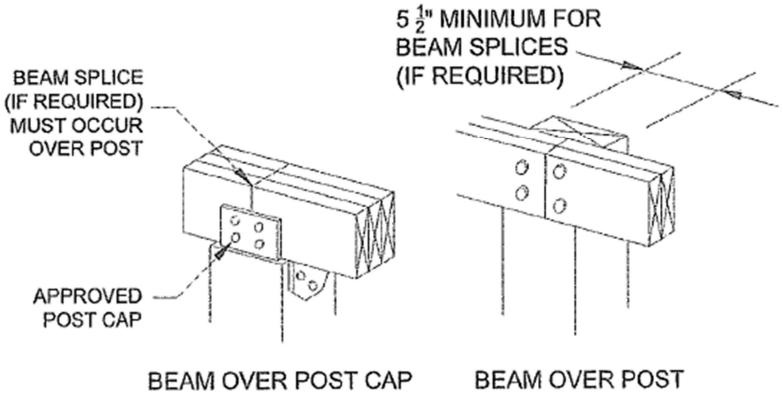

For SI: 1 inch = 25.4 mm.

FIGURE R507.5.1(1)
DECK BEAM TO DECK POST

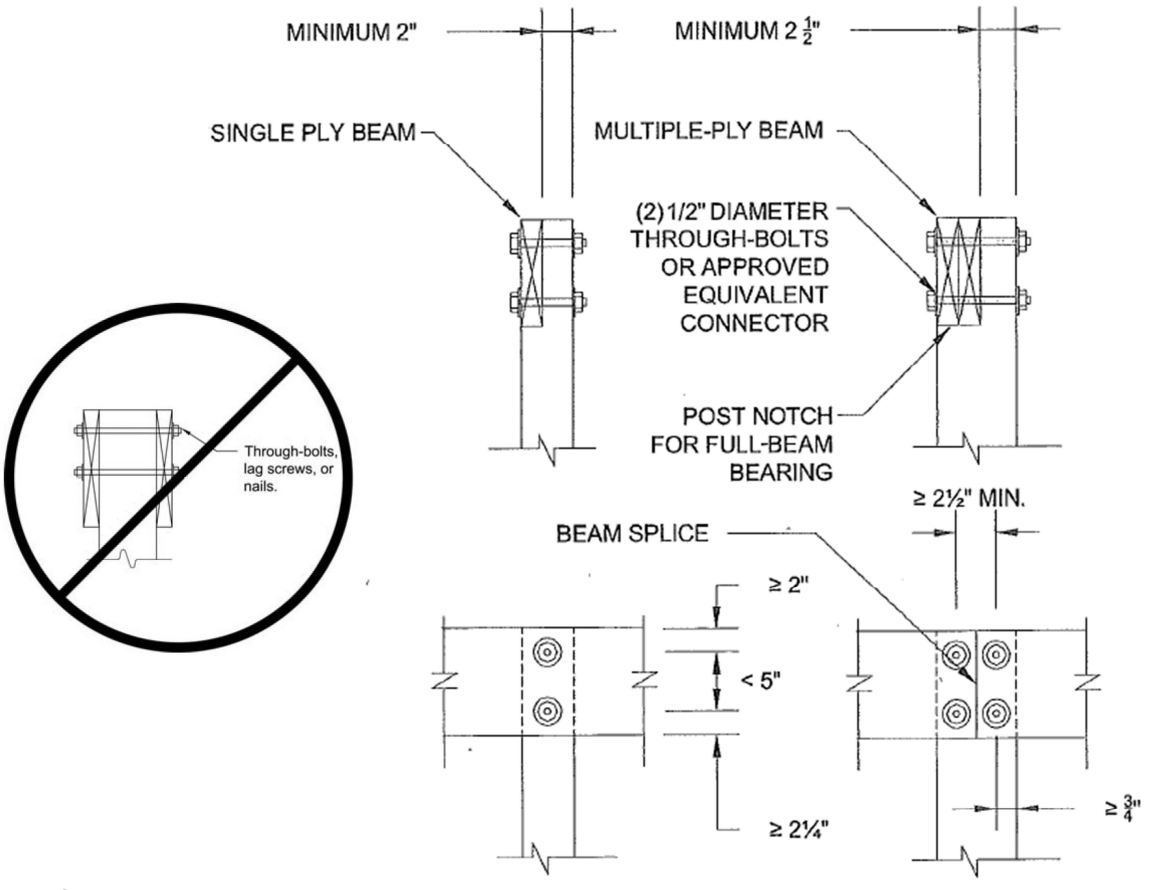

For SI: 1 inch = 25.4 mm.

FIGURE R507.5.1(2)
NOTCHED POST-TO-BEAM CONNECTION

DECK GUIDE

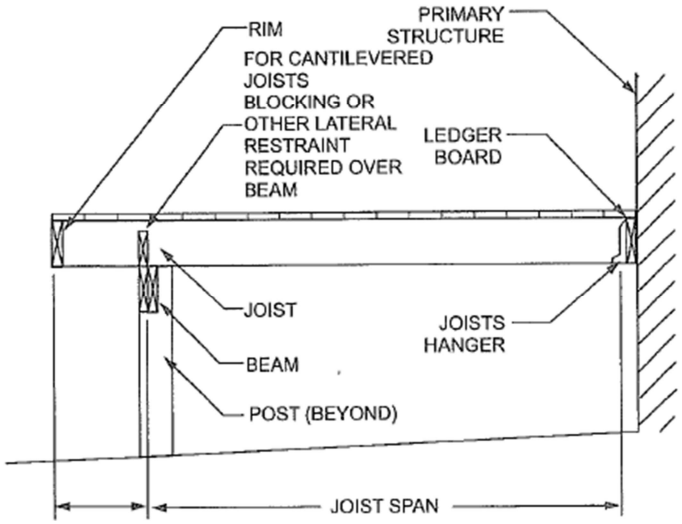

SEE DECK JOIST SPAN TABLE FOR ALLOWABLE CANTILEVER

CANTILEVERED JOISTS WITH DROPPED BEAM

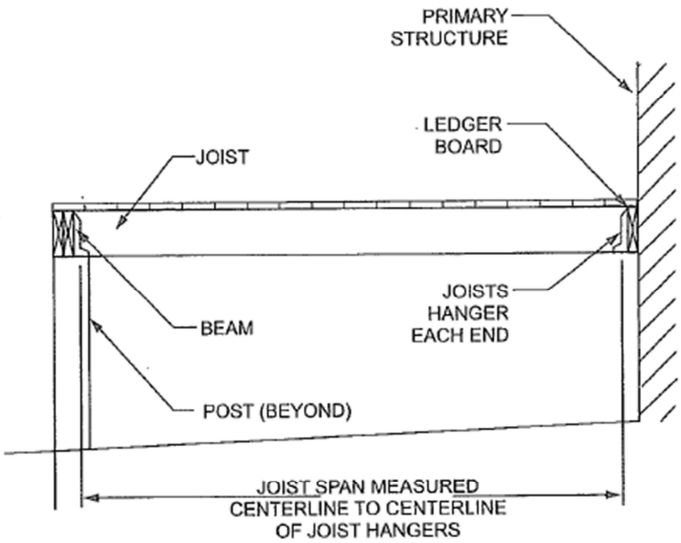

JOISTS WITH FLUSH BEAM

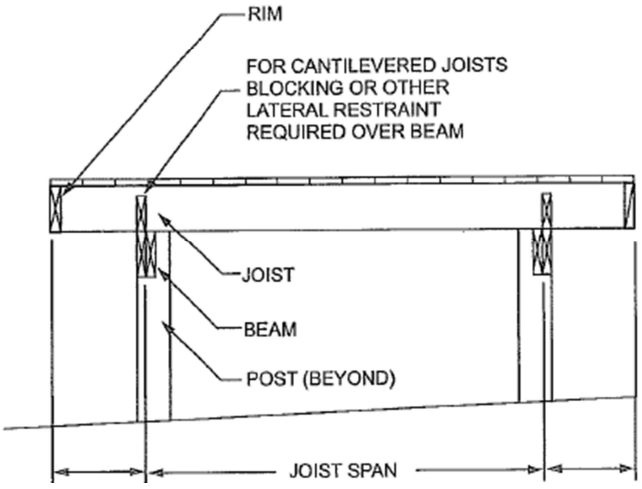

SEE DECK JOIST SPAN TABLE FOR ALLOWABLE CANTILEVER

JOISTS ON FREE-STANDING DECK WITH DROPPED BEAM

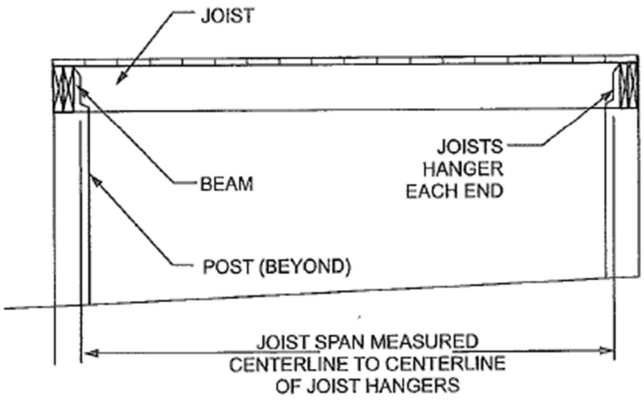

JOISTS ON FREE-STANDING DECK WITH FLUSH BEAM

FIGURE R507.6
TYPICAL DECK JOIST SPANS

ALLOWABLE JOIST CANTILEVER IS 25% OF THE JOIST SPAN UP TO 24”
OR AS INDICATED IN THE JOIST SPAN TABLE, WHICHEVER IS LESS.
MAXIMUM ALLOWABLE CANTILEVER IS 24”

DECK GUIDE

TABLE R507.6
DECK JOIST SPANS FOR COMMON LUMBER SPECIES (ft. - in.)

SPECIES[a]	SIZE	ALLOWABLE JOIST SPAN[b] SPACING OF DECK JOISTS (inches)			MAXIMUM CANTILEVER[c,f] SPACING OF DECK JOISTS WITH CANTILEVERS[c] (inches)		
		12	16	24	12	16	24
Southern pine	2 × 6	9-11	9-0	7-7	1-3	1-4	1-6
	2 × 8	13-1	11-10	9-8	2-0		
	2 × 10	16-2	14-0	11-5			
	2 × 12	18-0	16-6	13-6			
Douglas fir-larch[d], hem-fir[d] spruce-pine-fir[d],	2 × 6	9-6	8-8	7-2	1-2	1-3	1-5
	2 × 8	12-6	11-1	9-1	1-11	2-0	
	2 × 10	15-8	13-7	11-1	2-0		
	2 × 12	18-0	15-9	12-10			
Redwood, western cedars, ponderosa pine[e], red pine[e]	2 × 6	8-10	8-0	7-0	1-0	1-1	1-2
	2 × 8	11-8	10-7	8-8	1-8	1-10	2-0
	2 × 10	14-11	13-0	10-7	2-0		
	2 × 12	17-5	15-1	12-4			

For SI: 1 inch = 25.4 mm, 1 foot = 304.8 mm, 1 pound per square foot = 0.0479 kPa, 1 pound = 0.454 kg.

a. No. 2 grade with wet service factor.

b. Ground snow load, live load = 40 psf, dead load = 10 psf, L/Δ = 360.

c. Ground snow load, live load = 40 psf, dead load = 10 psf, L/Δ = 360 at main span, L/Δ = 180 at cantilever with a 220-pound point load applied to end.

d. Includes incising factor.

e. Northern species with no incising factor.

f. Cantilevered spans not exceeding the nominal depth of the joist are permitted.

TABLE R507.7
MAXIMUM JOIST SPACING FOR DECKING

DECKING MATERIAL TYPE AND NOMINAL SIZE	MAXIMUM ON-CENTER JOIST SPACING	
	Decking perpendicular to joist	Decking diagonal to joist[a]
$1^1/_4$-inch-thick wood	16 inches	12 inches
2-inch-thick wood	24 inches	16 inches
Plastic composite	In accordance with Section R507.2	In accordance with Section R507.2

For SI: 1 inch = 25.4 mm, 1 foot = 304.8 mm, 1 degree = 0.01745 rad.

a. Maximum angle of 45 degrees from perpendicular for wood deck boards.

DECK GUIDE

TABLE R507.9.1.3(1)
DECK LEDGER CONNECTION TO BAND JOIST[a, b]
(Deck live load = 40 psf, deck dead load = 10 psf, snow load ≤ 40 psf)

CONNECTION DETAILS	JOIST SPAN						
	6′ and less	6′1″ to 8′	8′1″ to 10′	10′1″ to 12′	12′1″ to 14′	14′1″ to 16′	16′1″ to 18′
	On-center spacing of fasteners						
1/2-inch diameter lag screw with 1/2-inch maximum sheathing[c, d]	30	23	18	15	13	11	10
1/2-inch diameter bolt with 1/2-inch maximum sheathing[d]	36	36	34	29	24	21	19
1/2-inch diameter bolt with 1-inch maximum sheathing[e]	36	36	29	24	21	18	16

For SI: 1 inch = 25.4 mm, 1 foot = 304.8 mm, 1 pound per square foot = 0.0479 kPa.

a. Ledgers shall be flashed in accordance with Section R703.4 to prevent water from contacting the house band joist.

b. Snow load shall not be assumed to act concurrently with live load.

c. The tip of the lag screw shall fully extend beyond the inside face of the band joist.

d. Sheathing shall be wood structural panel or solid sawn lumber.

e. Sheathing shall be permitted to be wood structural panel, gypsum board, fiberboard, lumber or foam sheathing. Up to 1/2-inch thickness of stacked washers shall be permitted to substitute for up to 1/2 inch of allowable sheathing thickness where combined with wood structural panel or lumber sheathing.

TABLE R507.9.1.3(2)
PLACEMENT OF LAG SCREWS AND BOLTS IN DECK LEDGERS AND BAND JOISTS

	MINIMUM END AND EDGE DISTANCES AND SPACING BETWEEN ROWS			
	TOP EDGE	BOTTOM EDGE	ENDS	ROW SPACING
Ledger[a]	2 inches[d]	3/4 inch	2 inches[b]	1 5/8 inches[b]
Band Joist[c]	3/4 inch	2 inches	2 inches[b]	1 5/8 inches[b]

For SI: 1 inch = 25.4 mm.

a. Lag screws or bolts shall be staggered from the top to the bottom along the horizontal run of the deck ledger in accordance with Figure R507.9.1.3(1).

b. Maximum 5 inches.

c. For engineered rim joists, the manufacturer's recommendations shall govern.

d. The minimum distance from bottom row of lag screws or bolts to the top edge of the ledger shall be in accordance with Figure R507.9.1.3(1).

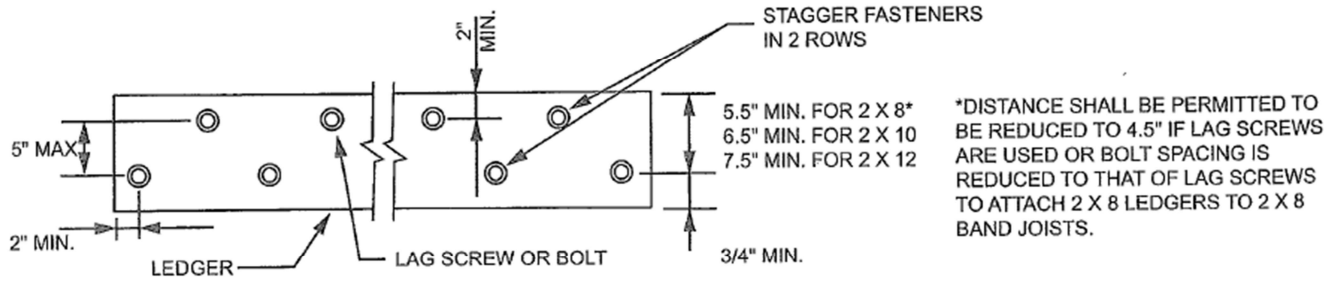

For SI: 1 inch = 25.4 mm.

FIGURE R507.9.1.3(1)
PLACEMENT OF LAG SCREWS AND BOLTS IN LEDGERS

DECK GUIDE

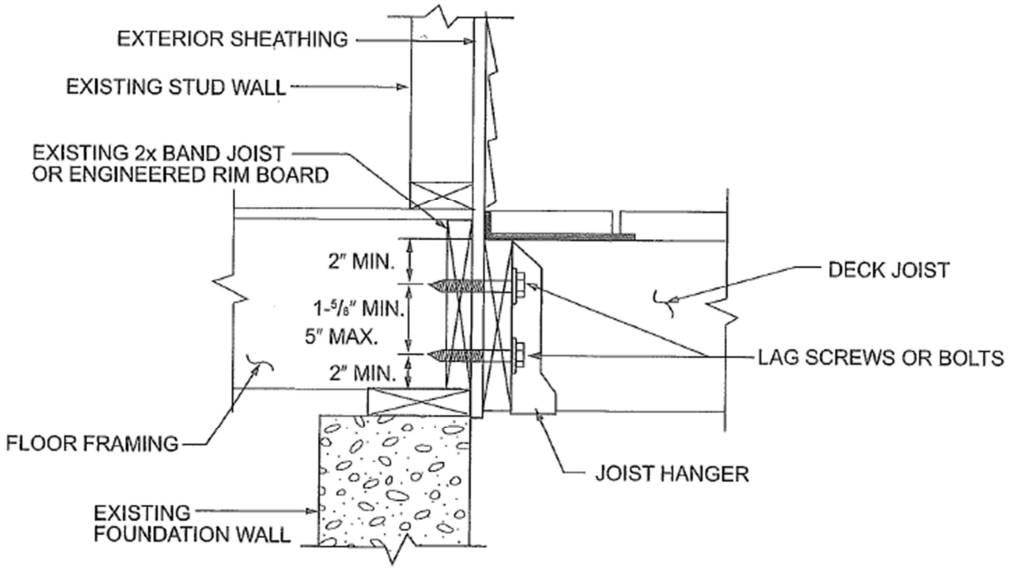

For SI: 1 inch = 25.4 mm.

FIGURE R507.9.1.3(2)
PLACEMENT OF LAG SCREWS AND BOLTS IN BAND JOISTS

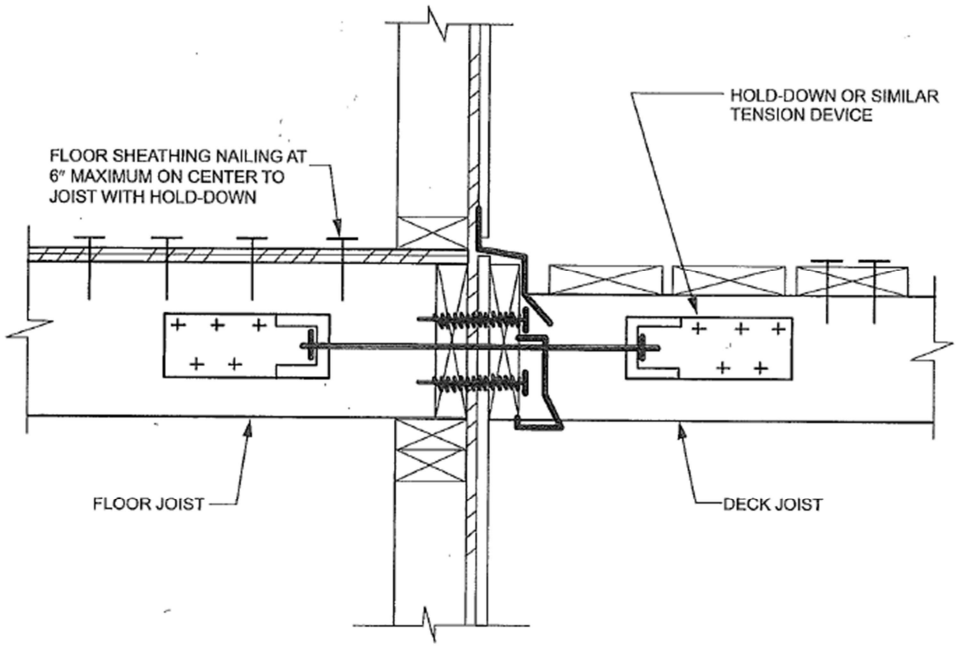

For SI: 1 inch = 25.4 mm.

FIGURE R507.9.2(1)
DECK ATTACHMENT FOR LATERAL LOADS

DECK GUIDE

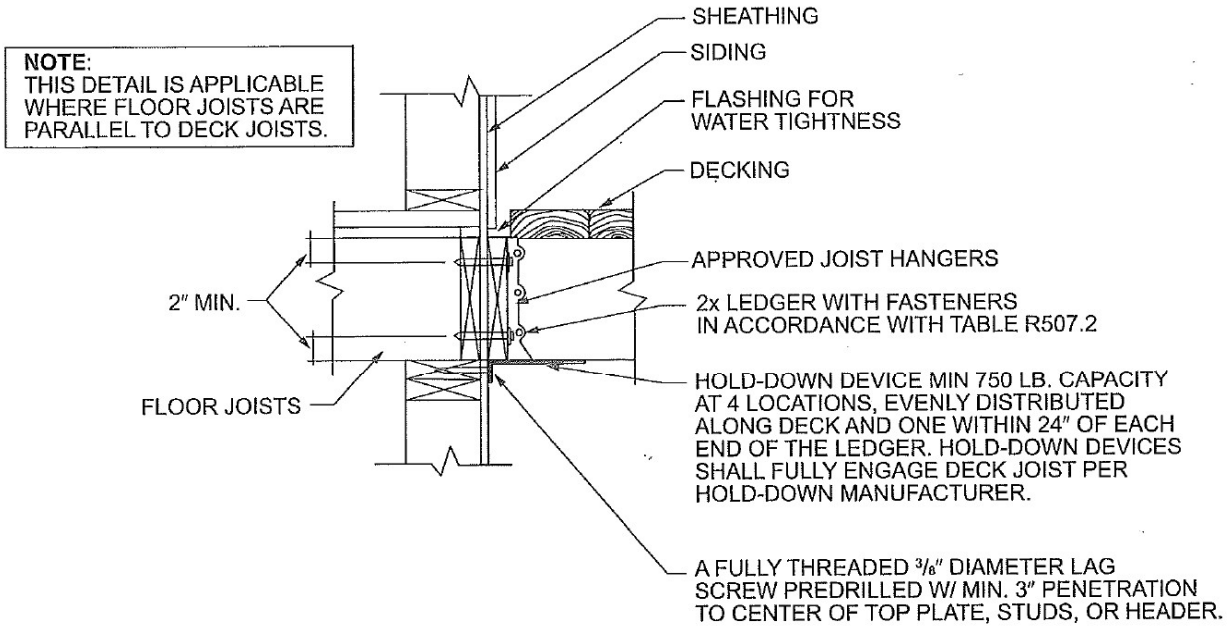

For SI: 1 inch = 25.4 mm, 1 foot = 304.8 mm.

FIGURE R507.9.2(2)
DECK ATTACHMENT FOR LATERAL LOADS

R311.5 Landing, deck, balcony and stair construction and attachment, Exterior landings, decks, balconies, stairs and similar facilities shall be positively anchored to the primary structure to resist both vertical and lateral forces or shall be designed to be self-supporting. Attachment shall not be accomplished by use of toenails or nails subject to withdrawal.

R311.7 Stairways.

R311.7.1 Width. Stairways shall be not less than 36 inches (914 mm) in clear width at all points above the permitted handrail height and below the required headroom height. The clear width of stairways at and below the handrail height, including treads and landings, shall be not less than 31 1/2 inches (787 mm) where a handrail is installed on one side and 27 inches (698 mm) where handrails are installed on both sides.

R311.7.3 Vertical rise. A flight of stairs shall not have a vertical rise larger than 151 inches (3835 mm) between floor levels or landings.

R311.7.5 Stair treads and risers. Stair treads and risers shall meet the requirements of this section. For the purposes of this section, dimensions and dimensioned surfaces shall be exclusive of carpets, rugs or runners.

R311.7.5.1 Risers. The riser height shall be not more than 7 3/4 inches (196 mm). The riser shall be measured vertically between leading edges of the adjacent treads. The greatest riser height within any flight of stairs shall not exceed the smallest by more than 3/8 inch (9.5 mm). Risers shall be vertical or sloped from the underside of the nosing of the tread above at an angle not more than 30 degrees (0.51 rad) from the vertical. At open risers, openings located more than 30 inches (762 mm), as measured vertically, to the floor or grade below shall not permit the passage of a 4-inch-diameter (102 mm) sphere.

R311.7.5.2 Treads. The tread depth shall be not less than 10 inches (254 mm). The tread depth shall be measured horizontally between the vertical planes of the foremost projection of adjacent treads and at a right angle to the tread's leading edge. The greatest tread depth within any flight of stairs shall not exceed the smallest by more than 3/8 inch (9.5 mm).

R311.7.5.3 Nosings. Nosings at treads, landings and floors of stairways shall have a radius of curvature at the nosing not greater than 9/16 inch (14 mm) or a bevel not greater than 1/2 inch (12.7 mm). A nosing projection not less than 3/4 inch (19 mm) and not more than 1 1/4 inches (32 mm) shall be provided on stairways. The greatest nosing projection shall not exceed the smallest nosing projection by more than 3/8 inch (9.5 mm) within a stairway.

R311.7.6 Landings for stairways. There shall be a floor or landing at the top and bottom of each stairway. The width perpendicular to the direction of travel shall be not less than the width of the flight served. For landings of shapes other than square or rectangular, the

DECK GUIDE

depth at the walk line and the total area shall be not less than that of a quarter circle with a radius equal to the required landing width. Where the stairway has a straight run, the depth in the direction of travel shall be not less than 36 inches (914 mm).

R311.7.8 Handrails. Handrails shall be provided on not less than one side of each flight of stairs with four or more risers.

R311.7.8.1 Height. Handrail height, measured vertically from the sloped plane adjoining the tread nosing, or finish surface of ramp slope, shall be not less than 34 inches (864 mm) and not more than 38 inches (965 mm).

R311.7.8.2 Handrail projection. Handrails shall not project more than 4 1/2 inches (114 mm) on either side of the stairway.

R31107.8.3 Handrail clearance. Handrails adjacent to a wall shall have a space of not less than 1 1/2 inches (38 mm) between the wall and the handrails.

R311.7.8.4 Continuity. Handrails shall be continuous for the full length of the flight, from a point directly above the top riser of the flight to a point directly above the lowest riser of the flight. Handrail ends shall be returned or shall terminate in newel posts or safety terminals.

R311.7.8.5 Grip size. Required handrails shall be of one of the following types or provide equivalent grasp-ability.

l. Type I. Handrails with a circular cross section shall have an outside diameter of not less than 1 1/4 inches (32 mm) and not greater than 2 inches (51 mm). If the handrail is not circular, it shall have a perimeter of not less than 4 inches (102 mm) and not greater than 6 1/4 inches (160 mm) and a cross section of not more than 2 1/4 inches (57 mm). Edges shall have a radius of not less than 0.01 inch (0.25 mm).

2. Type II. Handrails with a perimeter greater than 6 1/4 inches (160 mm) shall have a graspable finger recess area on both sides of the profile. The finger recess shall begin within 3/4 inch (19 mm) measured vertically from the tallest portion of the profile and have a depth of not less than 5/16 inch (8 mm) within 7/8 inch (22 mm) below the widest portion of the profile. This required depth shall continue for not less than 3/8 inch (10 mm) to a level that is not less than 1 3/4 inches (45 mm) below the tallest portion of the profile. The width of the handrail above the recess shall be not less than 1 1/4 inches (32 mm) and not more than 2 3/4 inches (70 mm). Edges shall have a radius of not less than 0.01 inch (0.25 mm).

R312.1 Guards. Guards shall be provided in accordance with Sections R312.1.l through R312.1.4.

R312.1.1 Where required. Guards shall be provided for those portions of open-sided walking surfaces, including stairs, ramps and landings, that are located more than 30 inches (762 mm) measured vertically to the floor or grade below at any point within 36 inches (914 mm) horizontally to the edge of the open side. Insect screening shall not be considered as a guard.

R312.1.2 Height. Required guards at open-sided walking surfaces, including stairs, porches, balconies or landings, shall be not less than 36 inches (914 mm) in height as measured vertically above the adjacent walking surface or the line connecting the nosings.

Exceptions:

1. Guards on the open sides of stairs shall have a height of not less than 34 inches (864 mm) measured vertically from a line connecting the nosings.
2. Where the top of the guard serves as a handrail on the open sides of stairs, the top of the guard shall be not less than 34 inches (864 mm) and not more than 38 inches (965 mm) as measured vertically from a line connecting the nosings.

R312.1.3 Opening limitations. Required guards shall not have openings from the walking surface to the required guard height that allow passage of a sphere 4 inches (102 mm) in diameter.

Exceptions:

1. The triangular openings at the open side of stair, formed by the riser, tread and bottom rail of a guard, shall not allow passage of a sphere 6 inches (153 mm) in diameter.
2. Guards on the open side of stairs shall not have openings that allow passage of a sphere 4 3/8 inches (111 mm) in diameter.

R312.1.4 Exterior plastic composite guards. Plastic composite exterior guards shall comply with the requirements of Section R317.4.

R317.3.1 Fasteners for preservative-treated wood. Fasteners, including nuts and washers, for preservative-treated wood shall be of hot-dipped, zinc-coated galvanized steel, stainless steel, silicon bronze or copper. Staples shall be of stainless steel. Coating types and weights for connectors in contact with preservative-treated wood shall be in accordance with the connector manufacturer's recommendations and Table R507.2.3.

R317.4 Plastic composites. Plastic composite exterior deck boards, stair treads, guards and handrails containing wood, cellulosic or other biodegradable materials shall comply with the requirements of Section R507.22.

DECK GUIDE

Figure 4. Beam Assembly Details.

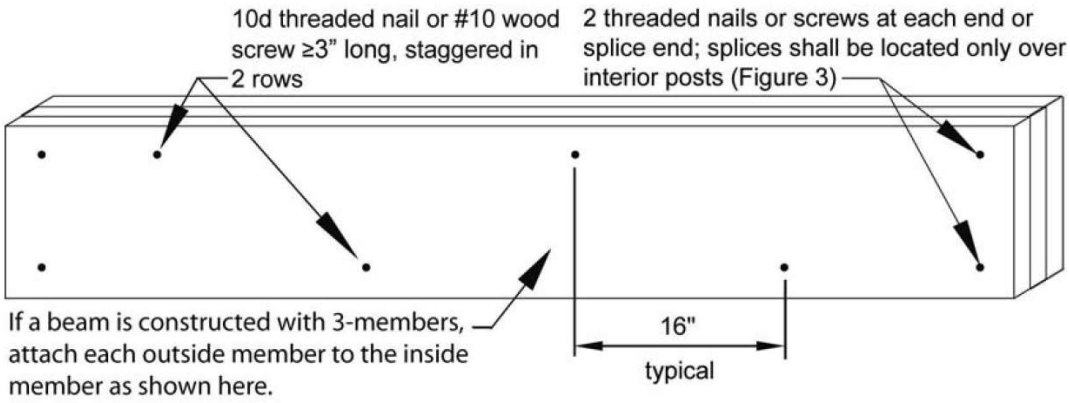

Figure 6. Joist-to-Beam Detail.

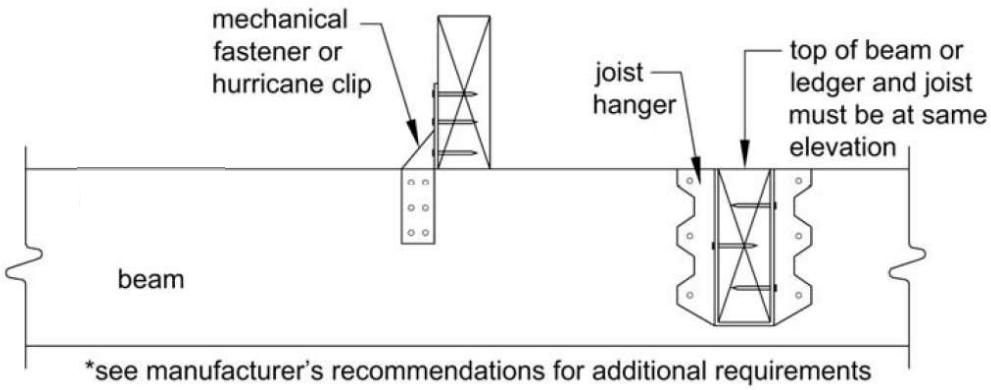

DECK GUIDE

Figure 9. Prohibited Post-to-Beam Attachment Condition.

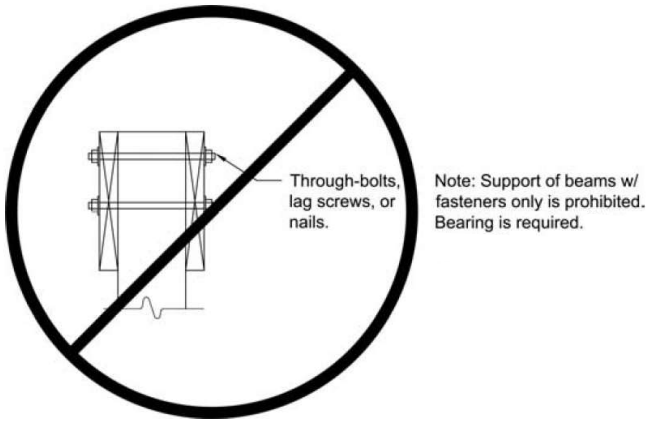

Figure 10. Diagonal Bracing.

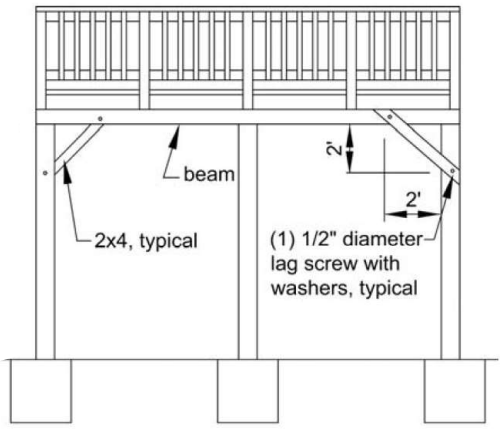

DIAGONAL BRACING PARALLEL TO BEAM
Note: Diagonal Bracing is prohibited on center posts.

PROHIBITED LEDGER ATTACHMENTS

Attachments to exterior veneers (brick, masonry, stone), hollow masonry, and to cantilevered floor overhangs or bay windows are prohibited (see Figures 17 and 18). In such cases, the non-ledger deck is required (See NON-LEDGER DECKS).

Figure 17. No Attachment to or Through Exterior Veneers (Brick, Masonry, Stone).

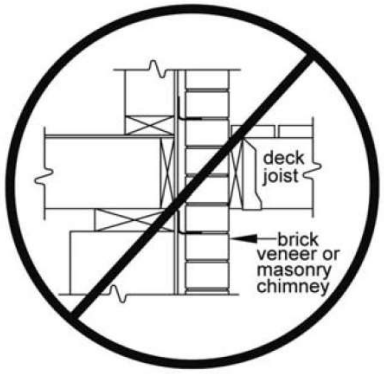

Figure 18. No Attachment to House Overhang with Ledger.



DECK GUIDE

Figure 24. Example Guard Detail.

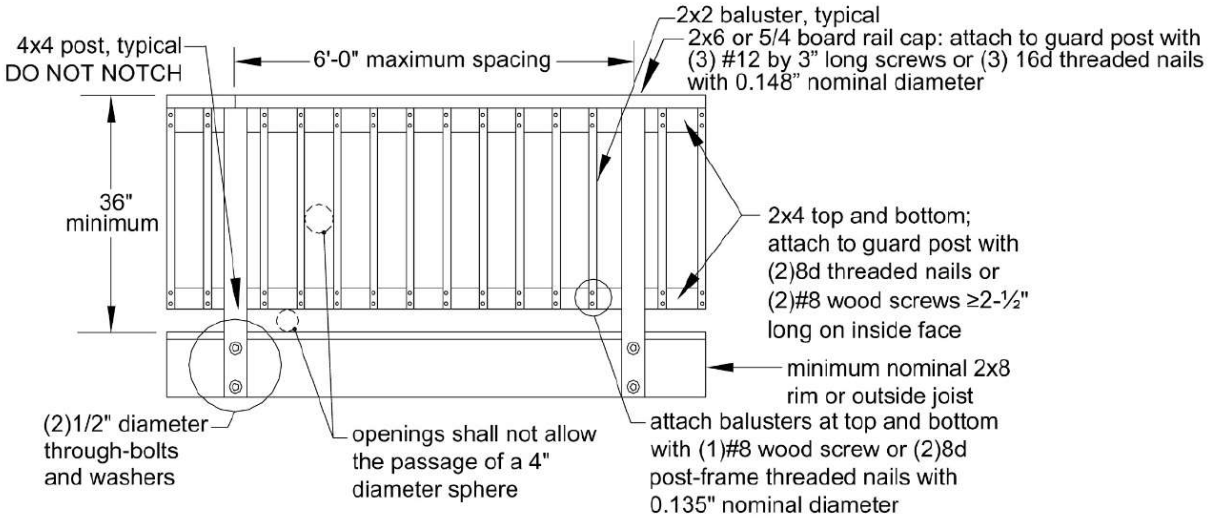

Figure 27. Tread and Riser Detail.

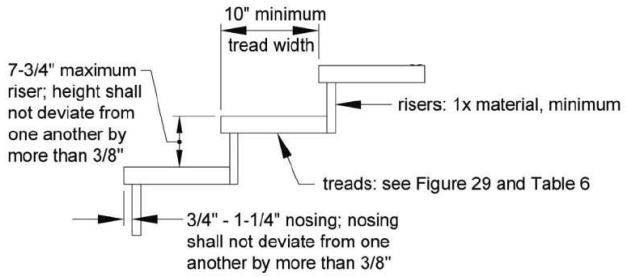

Figure 30. Stair Guard Requirements.

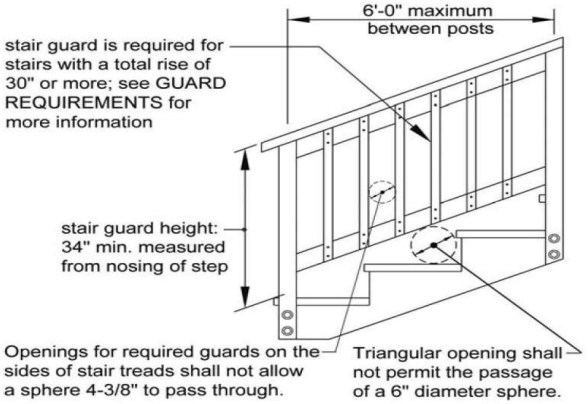

ALL STAIR STRINGERS MUST LAND ON A SUBSTANTIALLY SOLID LANDING PAD. COMMON PAVER BLOCKS ARE NOT ACCEPTABLE.

Figure 31. Stair Stringer Attachment Detail.

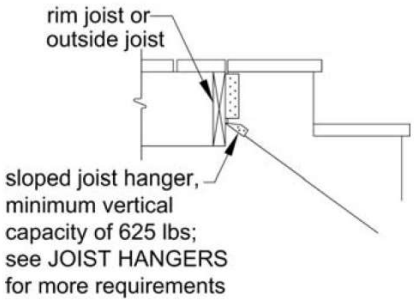

ATTACHMENT WITH HANGERS

DECK GUIDE

Figure 32A. Handrail Mounting Examples.

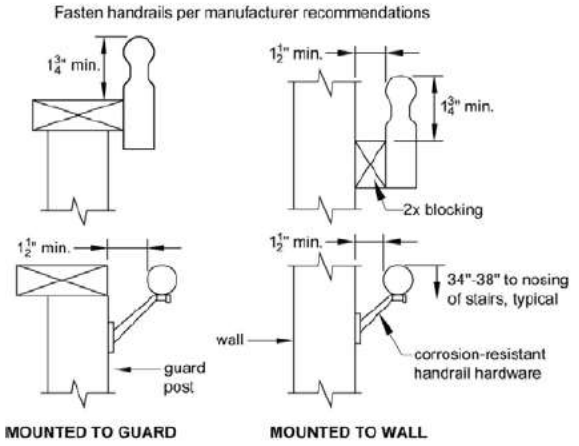

Figure 32B. Handrail Grip Size.

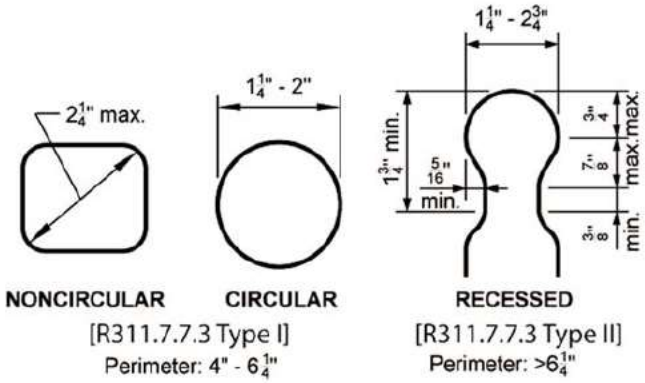

Figure 33. Miscellaneous Stair Requirements.

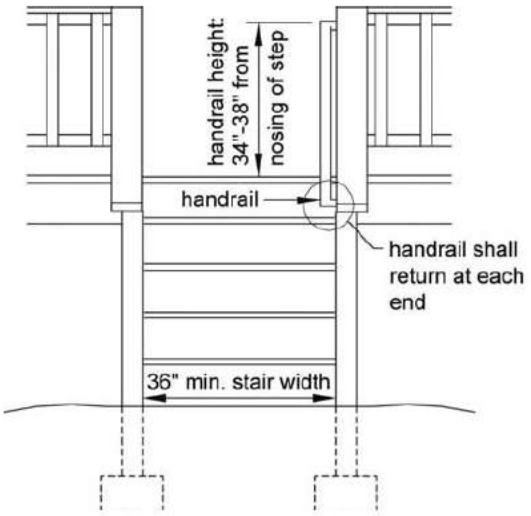

Figure 34. Stair Footing Detail.

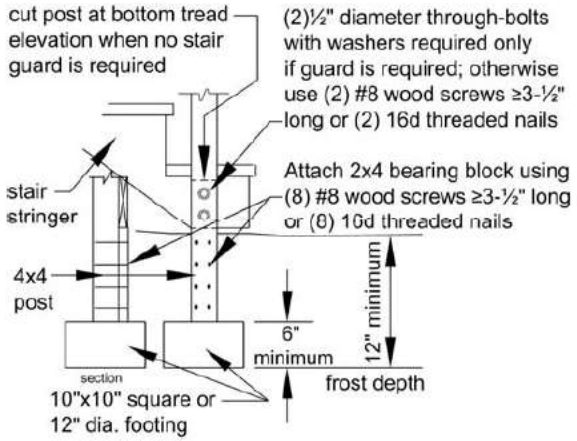

ALL STAIR STRINGERS MUST LAND ON A SUBSTANTIALLY SOLID LANDING PAD. COMMON PAVER BLOCKS ARE NOT ACCEPTABLE.